CAT 6A EZ Module Connector

Package Includes:

A. CAT 6A EZ Module, **1 Piece**
B. Wiring Cap, **1 Piece**

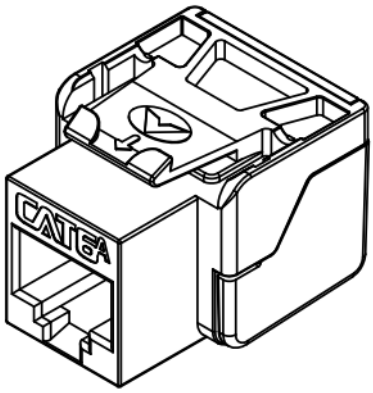

- CAT 6A rated connectors provide excellent performance for data networks requiring maximum speed and bandwidth.
- PCB technology provides maximum performance and superior signal quality.
- Enhanced crosstalk cancellation reduces return loss and improves performance by rejecting noise and unwanted signals.
- Exceeds ANSI/TIA-568-C requirements for permanent, channel link and component performances.
- Engineered to provide 110 IDC termination reducing installation time
- Includes an integrated TIA-568A/B color wiring diagram
- Backwards compatible to all lower rated category components
- Compatible with IC107 faceplates, inserts, surface mount boxes, and blank patch panels
- Used with JackEasy™ Termination Tool ICACSPDTEH, and 110 punch down tool ICACSPDT00
- Available in black, blue, ivory, orange, red, white, and yellow
- UL 1863 compliant
- Country Of Origin: Taiwan
- TAA Compliant

© Copyright 2025, ICC. This document and the designs, specifications and information contained herein are the property of ICC. Reproduction, modification, alteration or unauthorized use without ICC's approval is strictly prohibited. ICC and the ICC logo are registered trade name and trademark of ICC. All rights reserved.

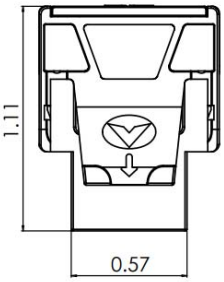



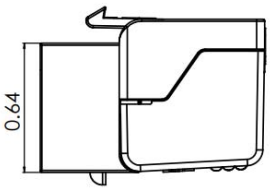



NOTE: UNLESS OTHERWISE SPECIFIED

1. Certification:

   A. Meets ANSI/TIA-568.2-D, Category 6A

2. Environmental Condition:

   A. Storage: -40 To +70°C

   B. Operation: -10 To +60°C

3. Electrical:

   A. Electrical Insulation Resistance: 500 MΩ Min @ 100V DC

   B. Dielectric Withstanding Voltage: 1000V DC or AC Peak Contact To Contact @ 60Hz For 1 Minute

   C. Spring Wire Contact Resistance: 20 MΩ Max

   D. IDC Contact Resistance: 2.5 MΩ Max

CAT 6A Connecting Hardware Requirements

Frequency	1.0	4.0	8.0	10.	16.	20.	25.	31.	62.	100	200	250	300	400	500
NEXT Loss	75.	75.	75.	74.	69.	68.	66.	64.	58.	54.	48.	46.	42.	37.	34.
FEXT Loss	75.	71.	65.	63.	59.	57.	55.	53.	47.	43.	37.	35.	33.	31.	29.
RETURN	35.	30.	30.	30.	30.	30.	30.	30.	30.	28.	22.	20.	18.	16.	14.

4. Mechanical:

   A. Retention: 50N (11 LBF) For 60s +/.5s

   B. Insertion/Extraction Life: 750 Cycles Min.

   C. IDC Wire Gauge: 22 ~ 24 AWG

WIRING DIAGRAM

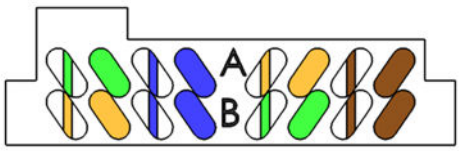

5. CAT 6A EZ Module:

   A. Material:

      -Housing: High Impact, Flame Retardant Plastic, UL 94V-0

      -Spring Wire: Phosphor Bronze Alloy Plated with 50 µin of Gold

      - Insulation Displacement Connector (IDC): Phosphor Bronze Alloy with 100 µin 100% Sn Alloy

   D. Colors: XX: BK-Black, BL-Blue, IV-Ivory, OR-Orange, RD-Red, WH-White, & YL-Yellow

2. Shielded Wire Cap:

   A. Material: High-Impact, Flame Retardant Plastic, UL 94V-0

   B. Color: Black

US FILE NO. 125268

© Copyright 2025, ICC. This document and the designs, specifications and information contained herein are the property of ICC. Reproduction, modification, alteration or unauthorized use without ICC's approval is strictly prohibited. ICC and the ICC logo are registered trade name and trademark of ICC. All rights reserved.